Installation instruction

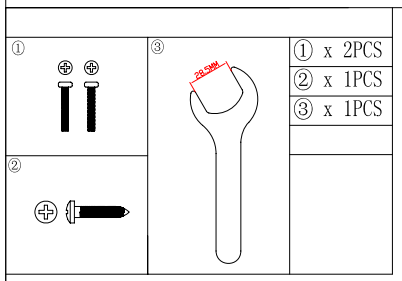

① x 2PCS
② x 1PCS
③ x 1PCS

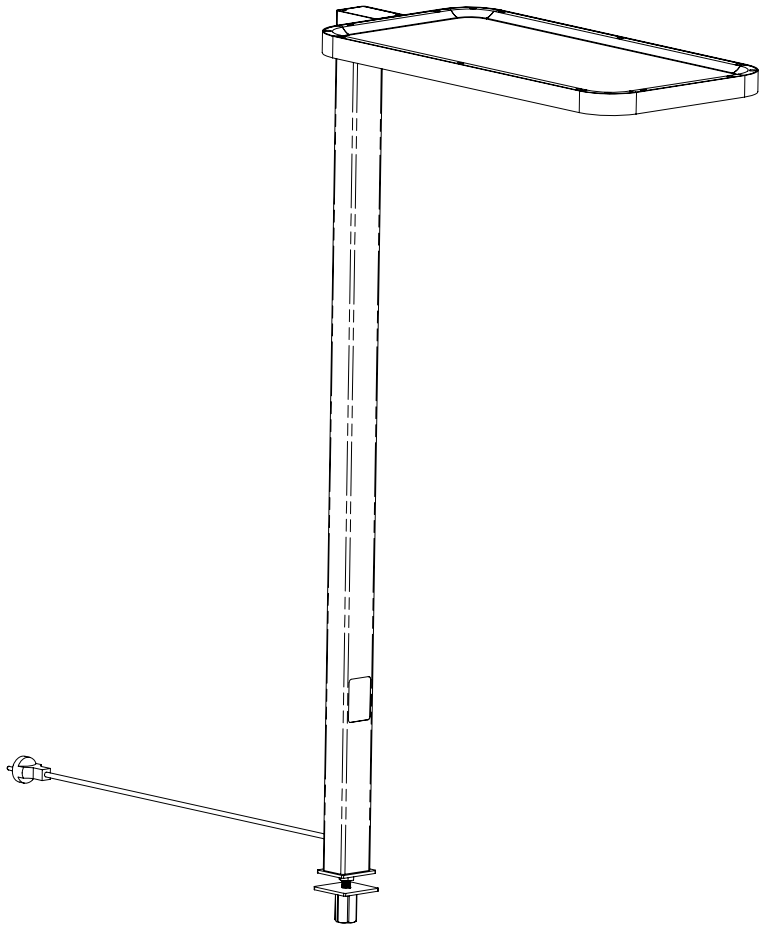

a

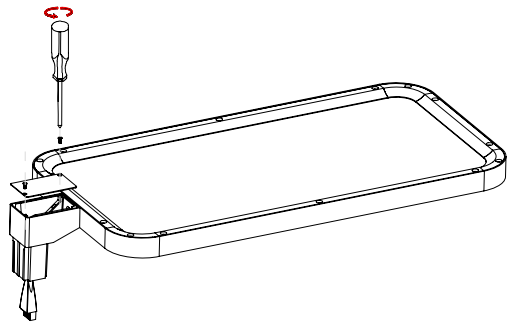

b

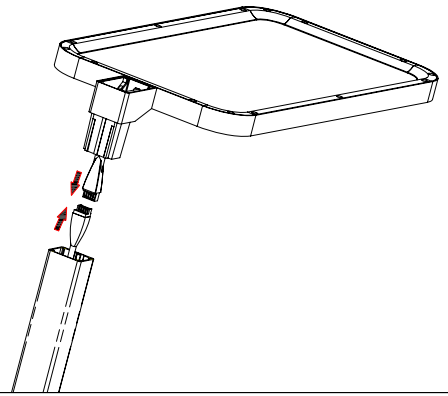

c

① x 2PCS
② x 1PCS

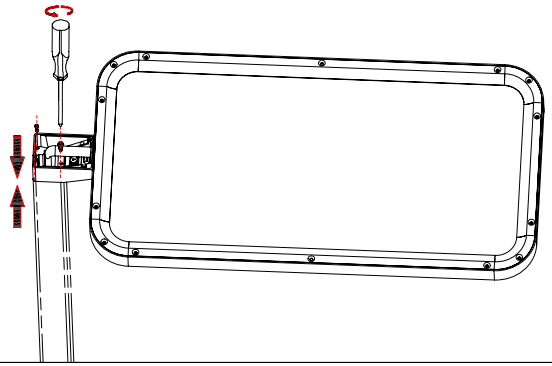

d

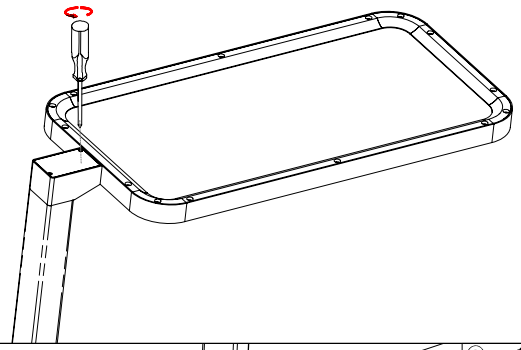

e

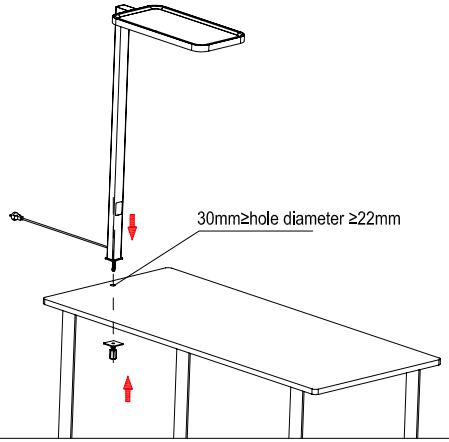

f
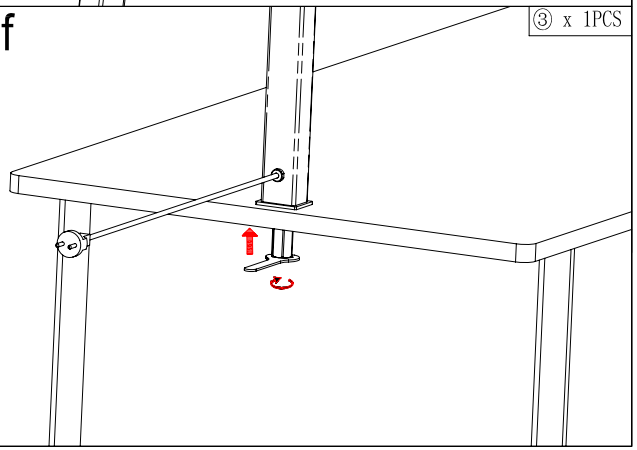
③ x 1PCS