Siv-D free standing luminaire

20.010.16012

GENERAL
Floor
Standing
black
IP20
indirect 12300 lm
direct 4100 lm
total 16400 lm
Beam Angle ↑140°/50°↓
UGR<12

LED
3000~6000K Variable
CRI ≥ 80
L80(B10)50,000H
SDCM <3

PHYSICAL
length 2372 mm
width 477 mm
height 1960 mm
19 kg

ELECTRICAL
150W
110 lm/W
200~240V AC

IP20 | UGR <12 | 140° 50°

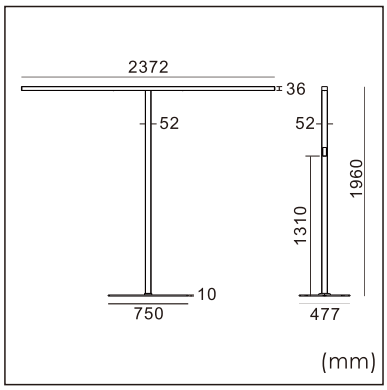

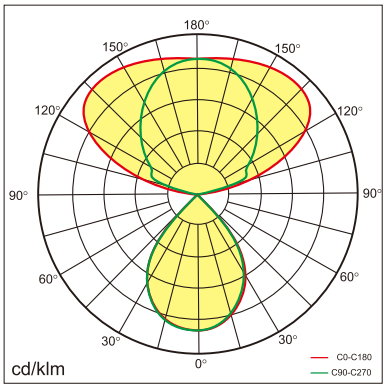

The data values for the luminous flux are initially subject to a tolerance of +/- 10%, those for the electrical connected load are initially subject to a tolerance of +/- 10%, and those for the colour temperature are initially subject to a tolerance of +/- 150 K, Product illustrations serve as examples and may differ from the original. No liability is assumed for typographical or printing errors. We reserve the right to make alterations in the interest of improving our products.