Heimdall free standing luminaire

20.006.36027

GENERAL

Floor
Standing
Silver
IP20
indirect 13000 lm
direct 1500 lm
total 14500 lm
Beam Angle ↑140°/80°↓
UGR<10

LED

3000~6000K Variable
CRI ≥ 80
L80(B10)50,000H
SDCM <3

PHYSICAL

length 1180 mm
width 336 mm
height 1975 mm
17 kg

ELECTRICAL

140W
120 lm/W
200~240V AC

IP20 | UGR <10 | 140° 80°

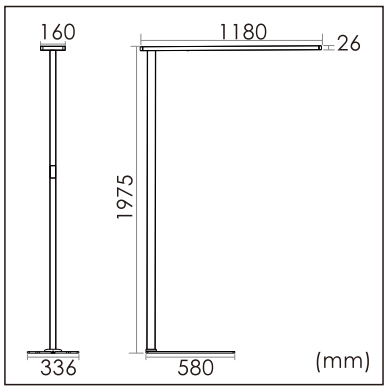

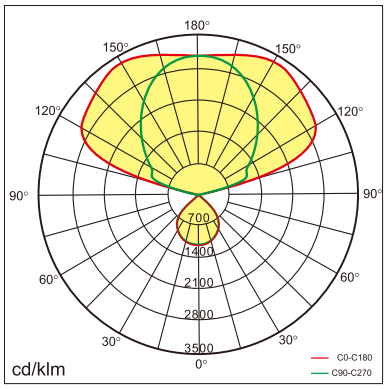

The data values for the luminous flux are initially subject to a tolerance of +/- 10%, those for the electrical connected load are initially subject to a tolerance of +/- 10%, and those for the colour temperature are initially subject to a tolerance of +/- 150 K, Product illustrations serve as examples and may differ from the original. No liability is assumed for typographical or printing errors. We reserve the right to make alterations in the interest of improving our products.