Siv-C3 Surface mounted luminaires

23.007.23045

GENERAL
Ceiling
Surface
White
IP20
850 lm
Beam Angle 65°
UGR<17

LED
3000K warm white
CRI ≥ 80
L80(B10)50,000H
SDCM <3

PHYSICAL
length 128 mm
width 128 mm
height 88 mm
0.8 kg

ELECTRICAL
8W
110 lm/W
1-10V Dimming
AC200~240V

CE RoHS IP20 UGR <17 65°

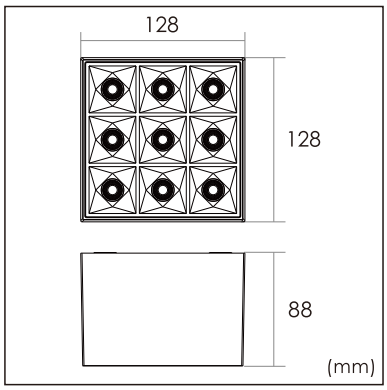

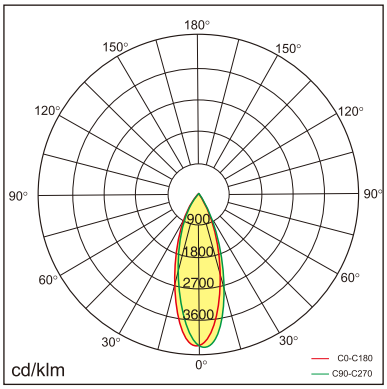

The data values for the luminous flux are initially subject to a tolerance of +/- 10%, those for the electrical connected load are initially subject to a tolerance of +/- 10%, and those for the colour temperature are initially subject to a tolerance of +/- 150 K, Product illustrations serve as examples and may differ from the original. No liability is assumed for typographical or printing errors. We reserve the right to make alterations in the interest of improving our products.