Siv-D4 Recessed luminaires

23.003.24004

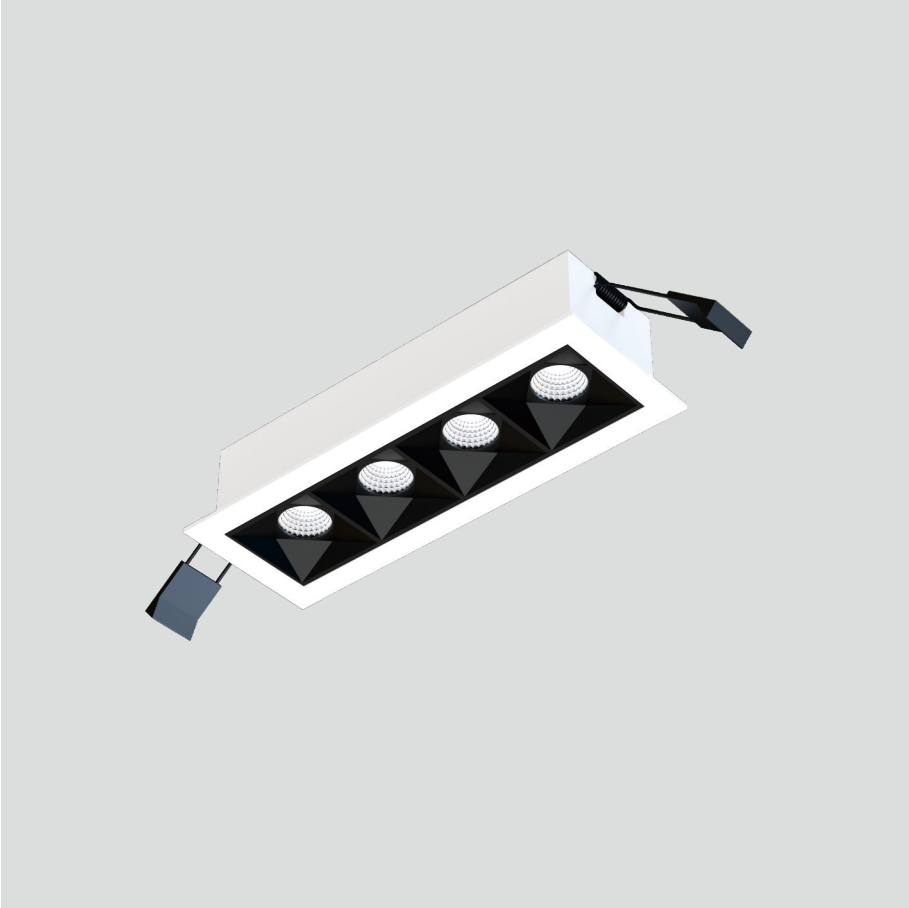

GENERAL

Ceiling
Recessed
White
IP20
778 lm
Beam Angle 55°
UGR<18

LED

4000K neutral white
CRI ≥ 80
L80(B10)50,000H
SDCM <3

PHYSICAL

length 182 mm
width 63.5 mm
height 40 mm
0.35 kg

ELECTRICAL

No Dimming
6W
120 lm/W
AC200~240V

IP20 UGR <18 55°

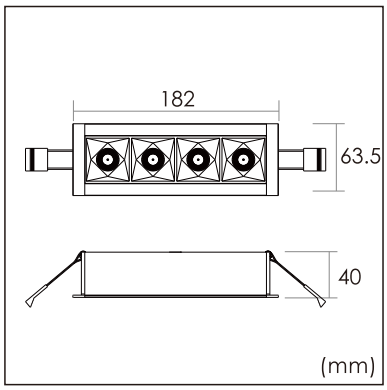

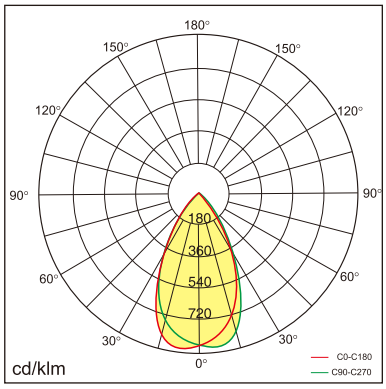

The data values for the luminous flux are initially subject to a tolerance of +/- 10%, those for the electrical connected load are initially subject to a tolerance of +/- 10%, and those for the colour temperature are initially subject to a tolerance of +/- 150 K, Product illustrations serve as examples and may differ from the original. No liability is assumed for typographical or printing errors. We reserve the right to make alterations in the interest of improving our products.